SCAN-360 RADAR DIMENSIONS AND MOUNTING DETAILS

ALL DIMENSIONS IN MILLIMETRES

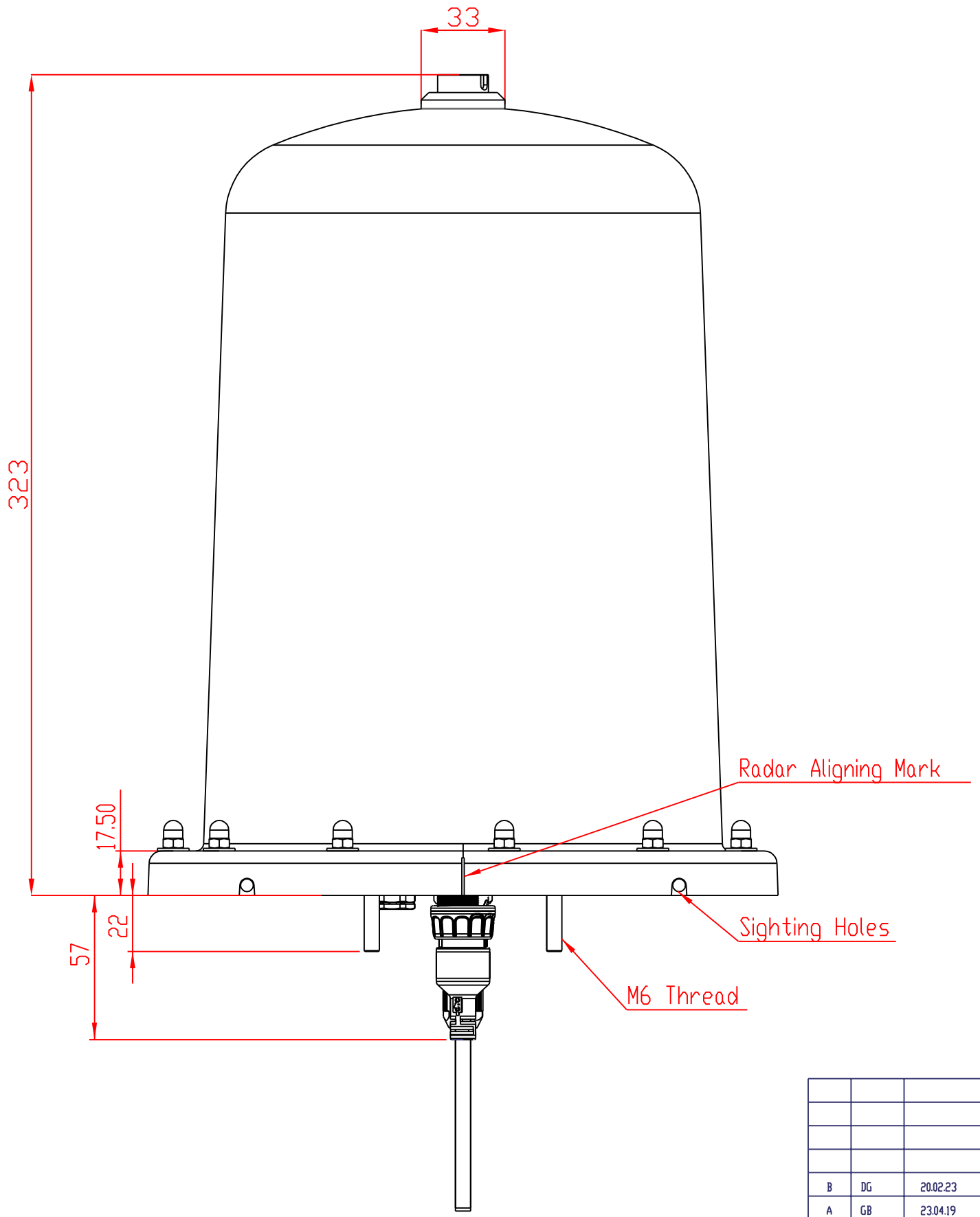

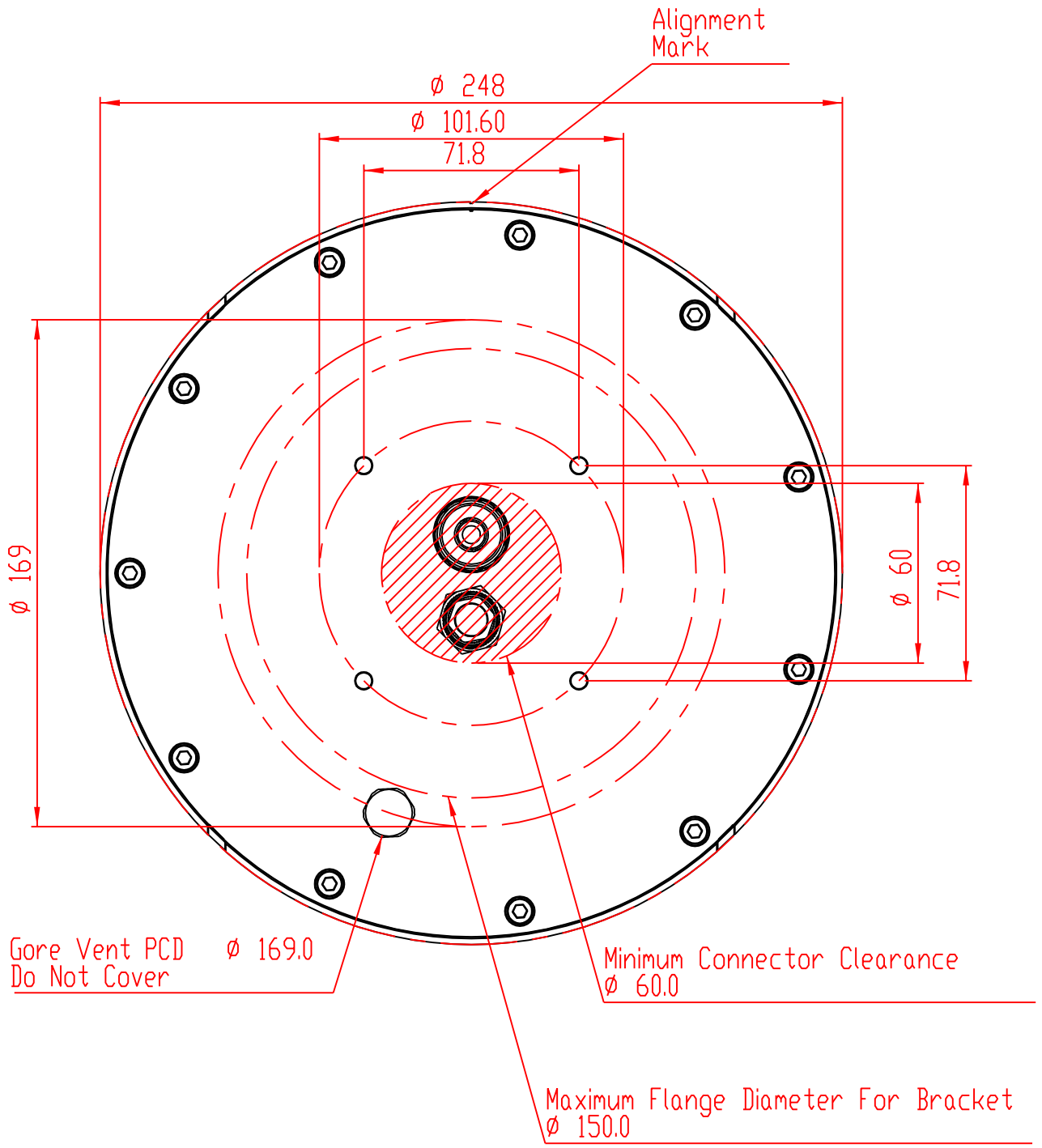

ISSUE	AUTHOR	DATE	ECN No.
B	DG	20.02.23	DCN1044
A	GB	23.04.19	

MATERIAL:

FINISH: FINISH

SCALE (ORIGINAL): ALL DIMENSIONS IN MILLIMETRES.

TOLERANCES: LINEAR: TOL-LIN ANGULAR: TOL-ANGULAR u.o.s.

© OGIER ELECTRONICS LTD own the copyright to this drawing which is supplied in confidence on the express condition that it is not used for any other purpose other than that for which it is supplied and is not reproduced or copied to any other person without the sole permission of OGIER ELECTRONICS LTD

3rd ANGLE PROJECTION

Ogier Electronics Ltd.
SANDRIDGE PARK
PORTERS WOOD
ST. ALBANS
HERTFORDSHIRE. AL3 6PH
TEL: 01727 853521
FAX: 01727 852186

DRAWING TITLE: POE RADAR OUTLINE DRAWING

DRAWING NO: 16M039 SHEET 1 A1